PAGE	143

BY	CHK	REVISION RECORD MODIFICATIONS	DATE	REV.
ALLEN		RELEASE TO PRODUCTION	2007,8,4	1.0

SPECIFICATION
Current Rate: 3 AMP
Insulation Rrsistance: 1000mΩMin
Contact Resistance: 20mΩMax
Dielectric voltage: 1000V AC for one minute
Operation Temperature: -40℃to +105℃

MATERIAL
Insulator: Polyester,UL94v-0
◎Standard: P.B.T or Nylon 6T
Contact Pin: Brass
Finish: Tin, Gold Plated
◎Standard: Gold Flash all over

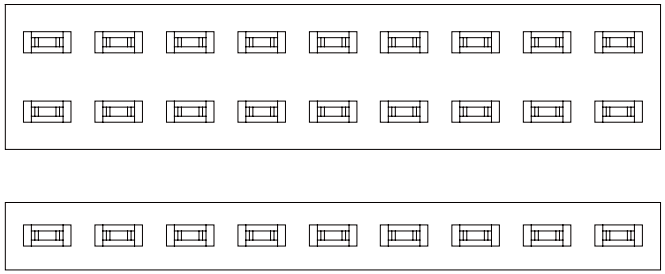

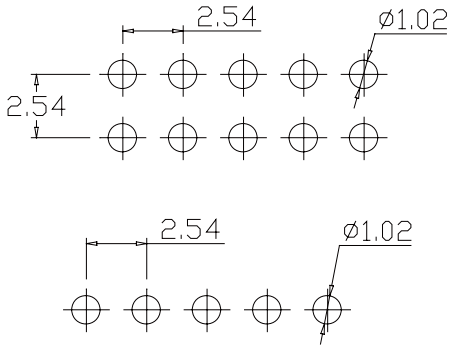

Recommended PCB Layout
(PCB TOLERANCE±0.05)

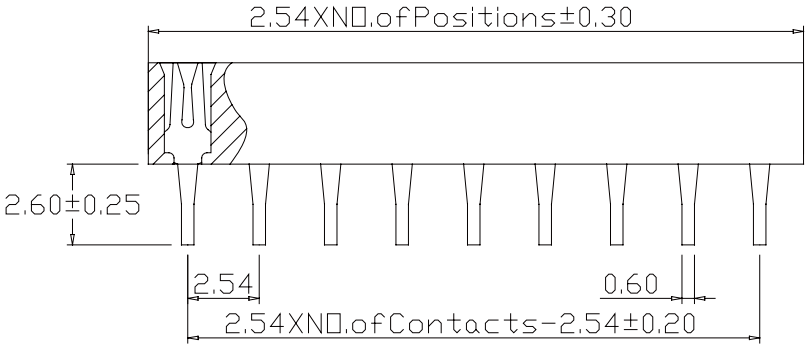

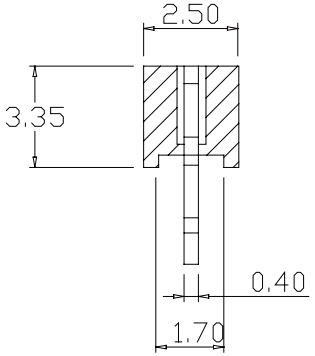

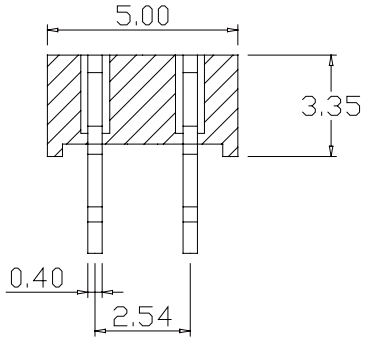

P	S	1	S	3	5	-	X	X	X	X	B	-	X

1:Single rows	
2:Dual rows	

No.of contacts per row (02-40)

G:Gold flah	S:Selective
GA:Gold 5u"	SA:Selective5u"
GB:Gold 10u"	SB:Selective10u"
GC:Gold 20u"	SC:Selective20"
GD:Gold 30u"	SD:Selective30"
T:Tin Plated	TE:Tin200u"

B:BlackInsulator

L:RoHS+P.B.T	
U:RoHS+Nylon6T	

APPRO	CHECK	DRAWN	PART NO.	PS1S35-XXXB-X			DESCRIPTION
			ITEM NO.				
			DRAW NO.				
			UNIT	mm	SCALE	no	
			TOLER		NO.		

Tel: 0769 22020068 Fax: 0769 22020069 E-mail: sales@vigortec.com